Roto pumps since 1968

WE COMPETE WITH ONLY ONE PUMP

ROTO TECH

ISSUE NO : 5 | QUARTERLY TECHNICAL BULLETIN | JULY - SEPT., 2025

WHAT'S INSIDE

- Leadership Lens
- An Insight On Twin Screw Pump: Where Versatility Meets Precision
- New Thailand Office
- Tree Plantation Campaign
- New Applications
- Major Orders Received
- New Distributors
- Interview With The People Behind The Pumps
- Exhibitions, New Joining & Best Installations
- Manufacturing Infrastructure

Junior: "Why are PC pumps bad at keeping secrets?"
Senior: "Because they keep things moving until everyone knows."



EDITORIAL

Dear Stakeholders,

We are thrilled to reconnect with you through this edition of our newsletter and share some exciting updates from Roto Pumps.

This quarter, we have charted new horizons by resolving unique and challenging applications, showcasing our commitment to innovation and engineering excellence. Our efforts have resulted in securing several major orders, reinforcing the trust our customers place in Roto Pumps.

In a significant step for our global presence, we have extended our reach in Thailand with the opening of a representative office, bringing us closer to our customers in the region and strengthening local support.

Honouring the legacy of Mr. N.K. Gupta, we are embracing a green initiative across all our units. As part of this, we are gifting green plants and driving a tree-planting campaign, reinforcing our dedication to sustainability and a cleaner, greener future.

These milestones reflect the relentless dedication of our team and the continued trust of our stakeholders. Together, we are not only solving today's challenges but also paving the way for a sustainable and innovative tomorrow. As always, thank you for your trust and support. Together, we continue to build on shared values and a relentless pursuit of excellence.

Sincerely yours,
Arvind Veer Gupta
Dy. Managing Director
Roto Pumps Ltd.

Editorial Team - Mr. Vinay Kumar Dhar | Mr. Manish Dabas | Ms. Asmita Mishra | Mr. Parshuram Bhati

LEADERSHIP LENS
Through the eyes behind Roto's growth

Decoding the Flow of Human and Knowledge Capital in Manufacturing

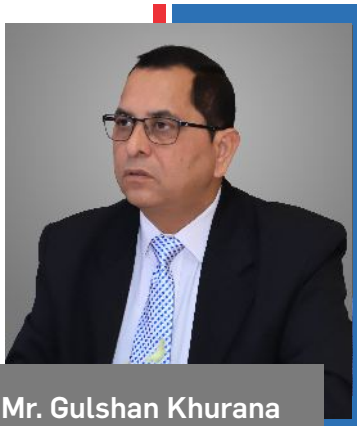

Mr. Gulshan Khurana
(COO, Roto Pumps)

In any manufacturing ecosystem, human and knowledge capital are the invisible & undeniable force that keeps everything moving efficiently, almost like the fluid in a pump itself. Over the years, I've realized that the real strength of a factory isn't just its machines or technology; it's also the people who operate them and the wisdom they carry.

When the last veteran machinist retires, it's not just skill that leaves — it's intuition, judgment, and decades of silent wisdom. I call this 'the muscle memory of machines' — the instinctive understanding of vibration, balance, and materials that no AI or blueprint can replicate. A blueprint can tell you the dimensions, but it cannot teach you the subtle feel of a perfect rotor-stator alignment or the nuanced adjustments that ensure precision.

At Roto, we address this by capturing shop-floor knowledge through mentorship, storytelling, and structured knowledge transfer. We've even conceptualized a 'Knowledge Flow Line' — a parallel to the assembly line — where human insight flows across generations, ensuring that experience is not lost but becomes a living, evolving asset. For me, preserving and flowing this human knowledge is just as critical as maintaining the machines themselves — it is what sustains innovation, quality, and engineering excellence."

This silent intelligence, accumulated over decades on the shop floor, is as critical as the metal that forms the pump. It's the bridge between precision and perfection — between what is measurable and what is mastered. Yet, as industries digitize, much of this tacit knowledge risks disappearing with every retirement letter and reshuffle.

At Roto, we believe preserving this "muscle memory of manufacturing" is not nostalgia — it's strategy. The future of engineering lies not in replacing intuition with intelligence, but in blending both to build machines — and organizations — that truly understand flow.

AN INSIGHT ON TWIN SCREW PUMP: WHERE VERSATILITY MEETS PRECISION

From the ancient elegance of the Archimedean screw to today's API-compliant, precision-engineered machines, the twin-screw pump has travelled an extraordinary journey of innovation. What began centuries ago as a simple water-lifting device has evolved into one of the most versatile, reliable, and indispensable pumping solutions in modern industry.

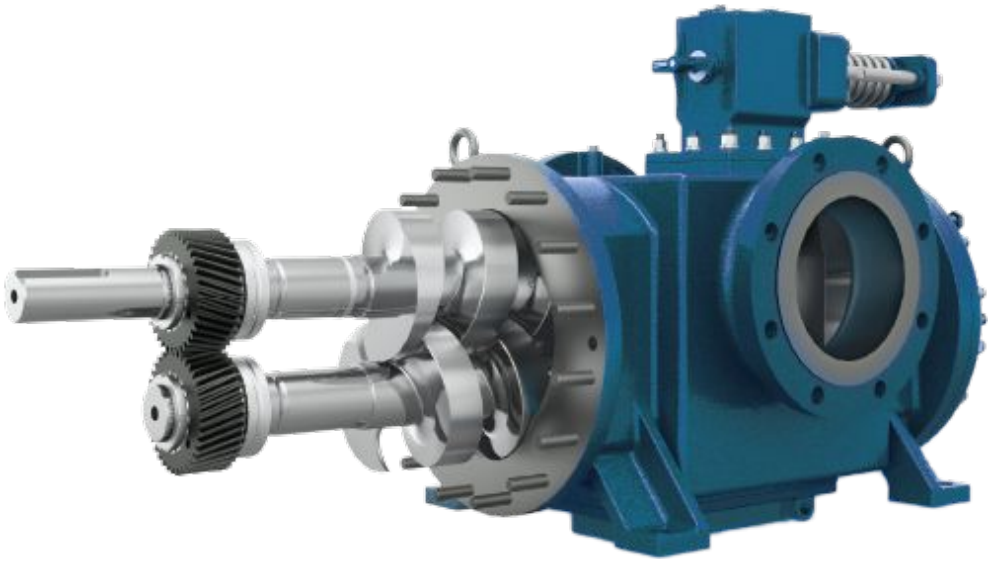

Whether it's handling light hydrocarbons, viscous vacuum residues, or gas-laden multiphase mixtures, twin-screw pumps rise to the challenge. In environments where process conditions swing unpredictably—viscosity changing by orders of magnitude, suction deteriorating, or vapor surging—this pump's ingenious non-contacting, gear-timed design ensures smooth, reliable, and pulse-free flow.

How It Works: The Principle of Operation

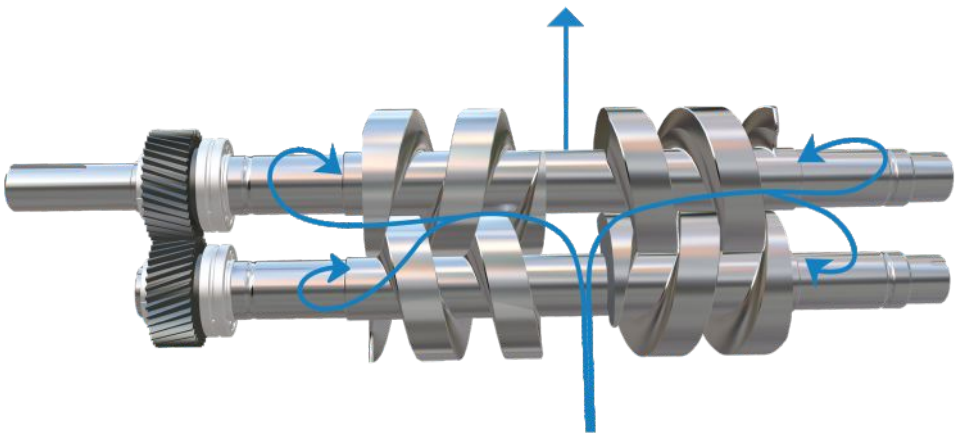

At the heart of the pump are two counter-rotating screws housed in a precision-machined casing. These form sealed cavities that gently carry fluid from suction to discharge. With hardened, helical timing gears, the screws rotate without touching—avoiding metal-to-metal contact, preventing wear, and delivering:

- **High volumetric efficiency**
- **Gentle handling of shear-sensitive products**
- **Short-term dry running capability without damage**

Add to this its dual-inlet hydraulic design that balances thrust, low NPSH requirements for cavitation-free performance, and the ability to manage entrained gases, and it's clear why twin-screw pumps outperform many centrifugal or positive displacement alternatives.

What makes Twin-Screw Pumps stand out?

- **Long and trouble-free service life:** No metal-to-metal contact between pumping elements, allowing limited dry running.
- **No axial thrust:** Dual flow of liquid in opposite directions balances thrust.
- **Higher volumetric efficiency:** Achieved by a special double profile of screw flanks.
- **High cavitation-free suction lift:** Due to low NPSH requirements.
- **Self-priming & gas handling:** Capable of handling entrained air, vapour, or gas.
- **Uniform metered flow:** Capacity proportional to speed, independent of head.
- **Wide fluid handling capability:** Suitable for clear lubricating, non-lubricating, and aggressive liquids, supported by varied designs and materials.
- **Safe to operate:** Equipped with an in-built relief valve to bypass excessive discharge pressure.

Design Strengths that Matter

Every part of a twin-screw pump is engineered keeping reliability in mind:

- **Screw Profile:** Modern double-profile flanks extend sealing paths and enhance volumetric efficiency across the viscosity spectrum.
- **Casing & Liner:** Robust designs manage flange loads and deliver low-loss suction geometries; replaceable liners allow cost-effective refurbishment.
- **Timing Gears:** Located on the drive side, oil-lubricated, and built from high-alloy steels, these gears transmit torque efficiently and maintain critical clearances.

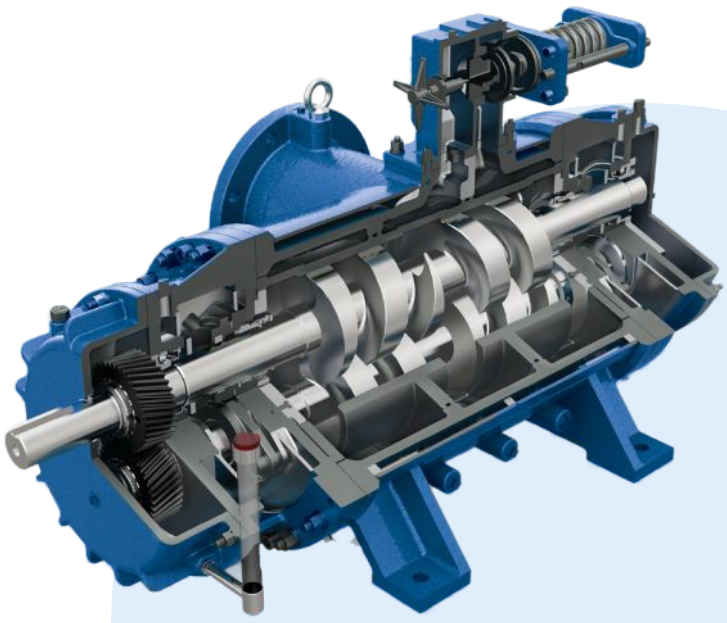

- **Bearings:** Spherical roller bearings absorb hydraulic loads and compensate for minor misalignment during installation.
- **Sealing Options:** From gland packing to API 682 cartridge double mechanical seals with appropriate flush and quench plans (a method of supplying a small amount of fluid) for hazardous duties.
- **Built-in Protection:** Internal relief valves bypass excessive discharge pressure, safeguarding both pump and system.

Materials of Construction

Housing Components: Cast Iron, Cast Steel & Stainless Steel

Liner: Cast Iron & Stainless Steel

Screws: Alloy Steel, Nitrided Steel & Stainless Steel

From cast iron for general service to duplex and super-duplex alloys for corrosive or abrasive media, the material selection ensures pumps match process needs. Nitrided steel screws, Ni-resist liners, and replaceable wear parts mean extended life and reduced total cost of ownership.

Shaft sealing is equally flexible, with arrangements from soft packing to advanced API 682 single/double mechanical seals - adaptable to everything from routine duties to the harshest hazardous environments.

Performance Summary

While global leaders in twin-screw technology boast flows up to 8,000 m^3/h and pressures to 150 bar, Roto's industrial twin-screw pumps are purpose-engineered for the sweet spot of heavy-duty performance:

- Flow: **Up to 940 m^3/h (4,140 GPM)**
- Pressure: **Up to 16 bar (230 PSI)**
- Viscosity: **Up to 100,000 cSt**
- Temperature: **Up to 350 °C (662°F)**

This makes them the go-to choice for industrial transfer, loading/unloading, and process applications.

Design Variants: Engineered for Every Duty

Horizontal External Bearing (Long Shaft): Best for non-lubricating media, with isolated bearings, long shaft support, and options for steam jacketing.



This configuration is engineered for npn-lubricating media where maximum bearing life and mechanical stability are priorities. The external bearings are completely isolated from the pumped liquid, running in a dedicated oil bath for clean, consistent lubrication. The long shaft arrangement ensures optimum rotor support over extended spans, ideal for larger pump sizes. Typically, foot-mounted for easy installation, these pumps can also be centre-line mounted for thermal stability in high-temperature

duties. Steam jacketing or electrical/steam tracing can be applied to maintain fluid temperature, while bearing and gearbox cooling ensures safe operation in hot environments or continuous-duty service. Various shaft-sealing both flushing and quenching arrangement is possible.

Horizontal External Bearing (Short Shaft): Compact, rigid, easy to maintain - perfect for thin or viscous, non-lubricating liquids in smaller footprints.



Designed for thin, viscous and non-lubricating media where a more compact footprint is desirable, the short shaft variant offers enhanced rigidity and reduced overhang while retaining the same external bearing isolation from the process fluid. Standard foot mounting makes installation straightforward, while sump heating keeps viscous products pumpable during cold starts. Gearbox cooling protects the drive components in high ambient or elevated process temperatures. An open box type sealing arrangement provides easy access to seal assemblies for quicker maintenance, especially in duties with frequent seal inspection or changeouts.

Horizontal Internal Bearing: Simple, economical, and compact-suited for clean, lubricating duties with fluid-lubricated bearings.



This design uses internal bearings lubricated directly by the pumped liquid, eliminating the need for a separate bearing lubrication system. It is suited to viscous, lubricating liquids where the fluid itself can maintain a protective oil film in the bearings and timing gears. Internal bearing pumps are mechanically simpler, with fewer external components, making them compact and often more economical for clean, lubricating duties. Options for heating design and sump heating allow them to handle products that require elevated temperatures to remain fluid.

Vertical Design: Space-saving, direct tank draw, and ideal for viscous oils or lubricants in sumps or pits.



The vertical execution is the go-to choice for viscous oils and non-lubricating media where space is limited or where fluids must be pumped from tanks, pits, or sumps. Available in fabricated steel for strength and adaptability, these pumps can be steam jacketed or equipped with electrical/steam tracing to maintain optimal product temperature. Gearbox and bearing housing cooling options allow safe operation under high thermal loads. Vertical pumps can be supplied with internal or external bearing arrangements, giving operators the flexibility to match the design to their media and maintenance preferences.

International Standard Compliance

Roto Twin Screw Pumps are engineered to meet or exceed the most demanding global industry standards, ensuring performance, safety, and interoperability in critical industrial environments.

- **Seal System:** Compatible with API systems for flush, quench, and barrier fluids, ensuring reliable sealing in harsh services.
- **Shaft Seal:** Available in single or double designs per API 682 (4th Edition), with flush and quench plans suited to process needs.

- **Electric Motor:** Supplied to IEC or NEMA specs for hazardous areas, meeting global and regional safety codes.
- **Connections:** ANSI/ASME B16.5 flanges for seamless integration with piping systems worldwide.
- **Baseplate:** Heavy-duty welded steel with drain and lifting points for safe installation, transport, and maintenance.
- **API 676:** Meets 3rd Edition standards, ensuring mechanical integrity, hydraulic performance, and consistent testing.
- **API 682:** Complies with 4th Edition seal standards for reliability, emissions control, and safe service in hazardous duties.
- **ATEX Directive 94/9/EC:** Certified for explosive atmospheres under strict European regulations.
- **API 520/526:** Relief valves sized to these standards guard against over-pressurisation.
- **API 671:** Metallic flexible couplings ensure torsional strength, alignment, and long-term reliability.
- **NACE MR 0175:** Materials resist sulphide stress cracking and corrosion in sour service environments.

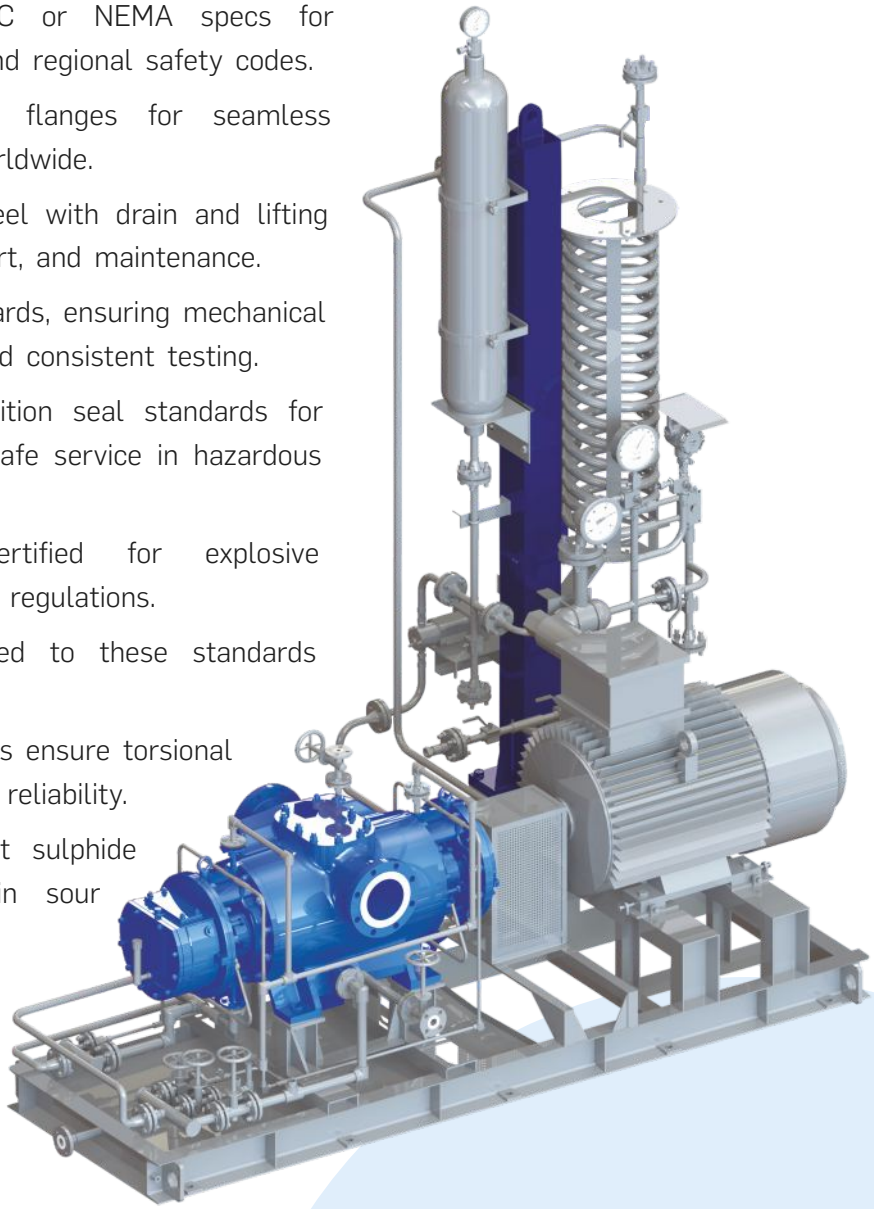

Applications Across Industries

Twin-screw pumps thrive where versatility is key:

Oil & Gas - Upstream: Heavy crude, stabilized crude, condensate, chemical injection, slop oil, drain oil, produced/oily water, and well water with gas.

Oil & Gas - Downstream: Vacuum residue, vis breaker and coker feeds, catalyst slurry, bitumen, asphalt, fuel oils, lubricants, slop oil, wax, crude, diesel, kerosene, naphtha, and gasoline.

Storage & Distribution: Tank stripping, rail wagon and road tanker loading/unloading, exports, and ship transfers.

Chemical & Processing: Fine chemicals, polymers, paints, inks, varnish, biofuels, petrochemicals, specialty chemicals, cosmetics, resins, solvents, ethanol, methanol, viscose (normal/reject/modal), caustic slurry, glue, and diesel oil.

Marine & Shipbuilding: AVCAT, bilge, lube oil, engine oil, light/heavy fuel oils, ballast water, lubricants, hydraulics, marine diesel, crude, asphalt, chemicals, offshore recovered oil, thermal/vegetable/waste/slop oils, tar, and produced water.

Power & Steel: Fuel, lube oil, high-speed diesel oil, light diesel oil, heavy fuel oil, LSHS, HPS, dirty oil, recovery oil, drain oil.

Take Away

Twin-screw pumps are not just machines - they are problem-solvers. By combining the robustness of positive displacement with the finesse of modern engineering, they adapt to an astonishing range of duties. Their ability to handle a vast range of viscosities, temperatures, and process conditions - from clean, lubricating fluids to abrasive, gas-laden residues - ensures dependable performance where other technologies struggle. With robust design options, international standards compliance, and proven reliability across oil & gas, chemicals, marine, and power sectors, Roto Twin Screw Pumps deliver not just flow, but confidence. With Roto Twin-Screw Pumps, industries gain more than just flow - they gain confidence, uptime, and long-term reliability. Wherever conditions are harsh and versatility is vital, they remain the engineer's first choice.

NEW THAILAND OFFICE

Roto Expands to Thailand! - Strengthening Our Presence in ASEAN

We are delighted to announce the opening of Roto Thailand Representative Office in Bangkok - a significant milestone in our journey of regional growth and customer proximity.

Our ASEAN expansion began with the establishment of Roto Pumps (Malaysia), followed by the launch of our Roto Indonesia Representative Office in Jakarta. Now, with our footprint in Thailand, we are directly and effectively serving three of the most dynamic ASEAN markets.

To lead this exciting new chapter, we welcome Ms. Jaeng Sanitkam as Sales Manager, effective 15th August 2025. She will drive business development initiatives for Roto in Thailand, with a strong focus on market penetration, strengthening our brand presence, and building long-term customer partnerships.

Thailand represents a mature and promising market for Progressive Cavity Pumps, home to leading global players. With dedicated local representation, Roto is well positioned to expand its market share by delivering the trusted quality, innovation, and value that define our brand.

This expansion underscores our commitment to customers in Thailand and our ambition to capture new opportunities while further consolidating Roto's leadership across the ASEAN region.

NEW APPLICATION DEVELOPMENTS

Glycol/Water mixture application

Problem:

Our customer approached us with a vital challenge. Their industrial systems relied on glycol-water mixtures—commonly formulated with ethylene or propylene glycol—to prevent freezing and maintain stable temperatures. While essential for their operations, these fluids were causing frequent issues: high pumping resistance, pressure losses, reduced heat transfer efficiency, and premature wear of their pumps. Their existing solution simply wasn't keeping up.

Roto's Solution

Understanding the problem, our team at Roto Pumps North America stepped in to craft a tailored solution. We recommended a customised progressive cavity pump, designed specifically for the unique properties of glycol-water mixtures. Our solution focused on:

- Delivering consistent, pulsation-free flow to protect sensitive system components and maintain precise temperature control.
- Ensuring chemical compatibility with glycol using carefully selected elastomers and metals for durability under thermal cycling.
- Handling viscous fluids efficiently, overcoming high resistance and complex piping layouts to boost overall performance.

- Preserving fluid integrity, reducing risks of aeration, degradation, and downtime

Results:

The results were transformative. The customer experienced reliable, high-efficiency pumping with minimal maintenance. System performance improved, operational risks decreased, and their previous Moyno pumps were successfully replaced with a solution that truly fit their needs.

At Roto Pumps, we don't just provide pumps—we deliver solutions that solve real-world challenges and create lasting operational benefits.

Acylicate cement application

Problem

Our client approached us with one of their most challenging pumping applications—handling a thick, sticky slurry in their revolutionary electrochemical cement process.

What was unique about their process?

Unlike traditional high-temperature kilns, they produce cement efficiently while drastically reducing carbon emissions, using electricity and chemistry to convert inexpensive rocks and waste materials into essential cement ingredients. The result? Sublime Cement—just as strong as conventional cement, but far greener. A critical step in this process involves sodium silicate, which accelerates hardening and strengthens the cement. Pumping this highly viscous, sticky slurry is notoriously tricky. Conventional pumps often clog, wear prematurely, or fail to provide the steady flow required to preserve material integrity.

Roto's Solution

Now that's where Roto Pumps stepped in. We recommended a progressive cavity pump (PCP) solution tailored to handle the unique challenges of their slurry. The solution ensured:

- Smooth, consistent flow—like squeezing toothpaste out of a tube, keeping the material intact
- Reliable handling of thick, sticky, and abrasive slurries without clogging
- Steady, non-damaging flow to maintain the integrity of the sodium silicate and cement mix
- Self-priming capability, efficiently handling slurry mixed with solids

Thanks to this tailored solution, our client can now pump their acylicate cement slurry efficiently, reliably, and with minimal maintenance, enabling them to focus on producing high-quality, eco-friendly cement at scale.

GROWING A GREENER LEGACY, INSPIRED BY VISION

In memory of our visionary leader, Mr. N.K. Gupta, we're turning his legacy into action. Across all our global locations, we're planting trees and gifting plants on employees' birthdays—a token of love, remembrance, and our commitment to a greener, sustainable future. His vision lives on, inspiring us to grow people, ideas, and a healthier planet.





MAJOR ORDERS

Secures Prestigious Order for 26 Pumps in Africa

We are proud to share a remarkable milestone – what started as a single-pump order has now grown to 26 pumps in one go. Impressed by our exceptional service, technical expertise, and reliable performance, one of the leading mining and manufacturing service providers decided to significantly upgrade their order quantity.

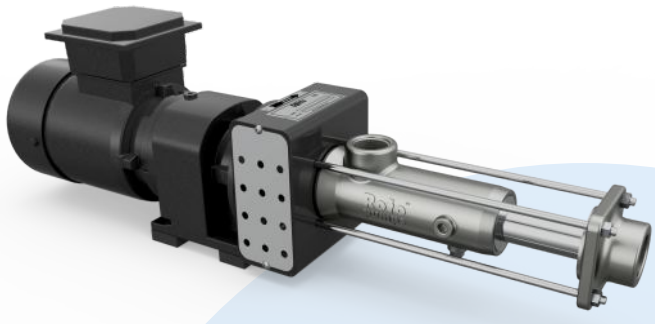

Roto Pumps Africa team worked hand-in-hand with the client to carefully assess their application requirements and deliver tailor-made pumping solutions that perfectly match their operational needs. This achievement is yet another testament to the trust and confidence our customers place in Roto Pumps worldwide.

Application Details

Pump Series: RJ

Media: Cleaner Frother

Qty.: 26

Flow Rate: 60-90 lph (15-23 GPH)

Pressure: 6 bar (87 PSI)

Bags Prestigious Order of 14 Pumps for Leading Anaerobic Digestion Plant Manufacturer

We are proud to have secured a prestigious order, through our local distributor, for 14 pumps from the leading anaerobic digestion plant manufacturer in Northern Ireland. Known for their expertise in designing, manufacturing, installing, and commissioning bespoke AD plants, they needed a solution that could handle digestate slurry efficiently. **Roto Pumps UK** delivered exactly that – providing robust, reliable, and high-efficiency progressive cavity pumps engineered for demanding bio-energy applications.

By ensuring smooth handling of biomass digestate slurry, Roto Pumps is helping them in boosting operational efficiency, minimizing downtime, and supporting sustainable energy generation for a greener future.

Application Details

Pump Series: RM

Media: Digestate

Qty.: 14

Flow Rate: 100 m^3/h (440 GPM)

Pressure: 2 bar (29 PSI)



Major Order Of 8 Pumps Secured from Leading Sanitoryware Manufacturing

Roto Pumps India secured a major order from a leading sanitoryware manufacturer to transform their ceramic slurry handling process. Ceramic slurry is highly viscous and abrasive, making it one of the toughest materials to transfer efficiently. With our customized pumping solutions, designed for durability and precision, Roto Pumps ensures smoother operations, reduced downtime, and reliable performance. This order highlights our expertise in engineering solutions that simplify even the most challenging fluid handling processes.

Application Details

Pump Series: RM

Media: Ceramic Slip & Ceramic Slurry

Flow Rate: 20 m^3/hr (88 GPM)

Pressure: 12 bar (174 PSI)

Qty.: 08

Major Order booked for Filter Press application to handle ETP sludges in Tamilnadu.

We secured a major order from a leading crop fertilizer organization for their Filter Press application to handle ETP sludge, a highly viscous, abrasive, and challenging to transfer, often leading to maintenance and efficiency concerns. With our robust and reliable pumping solutions, engineered specifically for such demanding applications, we ensured seamless sludge handling, improved process efficiency, and reduced operational downtime - further reinforcing our position as a trusted partner in critical fluid management solutions.

Application Details

Pump Series: RM **Media:** ETP Sludge **Qty.:** 02

Flow Rate: 45 m^3/hr (200 GPM) **Pressure:** 10 bar (145 PSI)

This One is a Big Win! - Replaced 30-year-old competitor's Pump in Malaysia

We are proud to share a milestone achievement — we have successfully replaced one well-known brand pumps for a leading marine sector organization in Malaysia, who had been using them for over 30 years. Their critical requirement was a reliable pump for their oil-water separator system, and our RDCA531 pumps proved to be the perfect solution.

Key upgrades included:

- **4-pole motor with geared drive** – offering better torque and efficiency with just 1.5 kW power (compared to their older 2-pole motor setup).
- **Mechanical seal design** – reducing leakage issues and maintenance needs compared to traditional packing.

Application Details

Pump Series: RD **Media:** Oil-water Mixture

Flow Rate: 5 m^3/hr (22 GPM) **Pressure:** 3 bar (43 PSI)

Received order for newly launched paper mill in Kolkata

We are delighted to support the newly launched paper mill in kolkata, which has placed an order for three pumps for their critical thickened pulp transfer application. Handling 12% consistency pulp requires a solution that ensures high volumetric efficiency, gentle handling, and clog-free performance - and our WMPE692 model is engineered precisely for this challenge. these pumps have enabled our client to achieve consistent pulp quality, reduced downtime, optimized energy consumption, and enhanced operational reliability.

Application Details

Pump Series: WM **Media:** Thickened Pulp **Qty.:** 03

Flow Rate: 72 m^3/hr (317 GPM) **Pressure:** 5 bar (72 PSI)



Secured Major Order for Soap Processing in Africa

With an impressive processing capacity of 500 tons per day, precision and reliability become critical. Roto Pumps' high-performance progressive cavity pumps ensure the smooth and efficient transfer of soap fluid throughout the process – safeguarding product quality while reducing downtime and energy losses.

Our pumps are engineered to handle viscous fluids gently and efficiently, enabling consistent throughput and operational excellence. By delivering robust performance with minimal maintenance needs, Roto Pumps is helping the customer achieve superior efficiency and reliable production.

Application Details

Pump Series: RL | **Media:** Soap Fluid | **Qty.:** 01

Flow Rate: 20 m^3/h (88 GPM) | **Pressure:** 5 bar (72 PSI)

Secured a significant customized order in Germany as the customer struggled with competitor pump inefficiencies, trusting Roto for its reliable and proven performance.

A year ago, we replaced a competitor's pump with our RLCB571 model for a lime milk pumping application — and the results spoke for themselves. The customer was so satisfied with the performance, reliability, and customer relationship management of the Roto Pumps team that they have now ordered another unit to meet their growing needs. We have customised it high starting torque with a 3 kW Nord geared drive.

Application Details

Pump Series: RL | **Media:** Lime Milk | **Qty.:** 02

Flow Rate: 8 m^3/h (35 GPM) | **Pressure:** 2.5 bar (36 PSI)

Receives Breakthrough order for P Series Pump

We received breakthrough order for newly launched 'P' Series Pump from a leading brewery OEM in **Bangalore**. Traditionally sourcing their spent grain pumps from Netzsch, they have chosen Roto for the very first time - a strong endorsement of our technology, reliability, and value proposition. This order marks a key milestone in building long-term partnerships in the brewery segment and reinforces our position as a trusted pumping solutions provider for challenging applications like spent grain handling.

Application Details

Pump Series: WP | **Media:** Spent Grain | **Qty.:** 01

Flow Rate: 23 m^3/hr (101 GPM) | **Pressure:** 07 bar (101 PSI)

NEW DISTRIBUTORS

Roto Pumps North America Partnered With 3 New Major Distributors

Cayuga Industrial - New York

Roto Pumps has taken a significant step in expanding its footprint in North America by partnering with Cayuga Industrial (NY) as its new distributor. They are a leading industrial equipment supplier based in Auburn, New York. This strategic collaboration is set to enhance Roto Pumps' reach nearby New York region, ensuring customers benefit from high-quality pumping solutions and expert support. Known for its extensive experience in pump equipment distribution and service, Cayuga Industrial specializes in delivering top-tier fluid handling solutions across diverse industries. With a strong focus on customer satisfaction and technical expertise, Cayuga Industrial is well-positioned to represent Roto Pumps' innovative product range.

Scott Process – New York

Roto Pumps has partnered with Scott Process, further strengthening its footprint in the American market. Scott Process is renowned for delivering turnkey modular solutions — complete with pumps, structural skids, piping, wiring, heat tracing, and insulation — all engineered and assembled within a single, climate-controlled environment. Leveraging advanced computerization, automation, and proprietary production processes, Scott Process has built a reputation for consistently delivering the highest quality products — safely, on time, and on budget. This shared commitment to excellence makes them the ideal partner to represent Roto Pumps' innovative solutions across the region.

IFG Services Inc. - California

Roto Pumps is proud to announce its partnership with IFG Services, strengthening our presence in critical industries across the region. IFG Services specializes in high-performance industrial equipment - from pumps, gearboxes, and valves to centrifuges, mixers, and mechanical seals — serving sectors such as refining, mining, wastewater treatment, chemical processing, biotech, pharmaceuticals, food & beverage, and power generation. With decades of technical expertise and a commitment to excellence, IFG Services ensures reliable solutions backed by exceptional service and support, making them the ideal partner to deliver Roto Pumps' innovative and sustainable pumping solutions for both new and upgraded facilities.

INTERVIEW WITH THE PEOPLE BEHIND THE PUMPS

In this interview segment, our engineers, technicians, assemblers, and service specialists share their experiences, challenges, and what it takes to deliver top-notch support to every customer.

How long have you worked for Roto Pumps and how has the experience been?

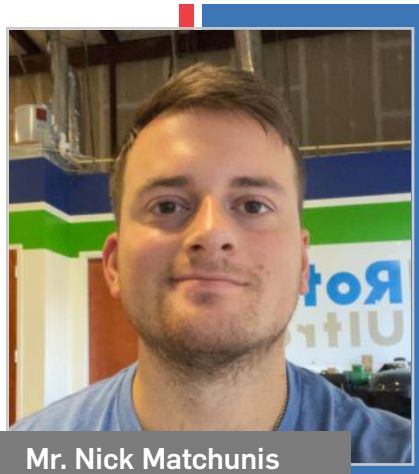

Mr. Nick Matchunis
(Operations Manager)
Roto Pumps North America

I started with Roto in May 2023. I was originally brought on to aid in the relocation of our American HQ from Tulsa, OK to Fort Mill, SC, and then to provide additional support to the sales team while training for a sales role myself. As time went on, I began taking more and more responsibility in the operations theater as opposed to outside sales, and my plan changed as I am now the operations manager of our HQ. I have enjoyed working here as I get the opportunity to wear many hats and my day to day is always changing. We are a tight knit team with personalities and work ethics that mesh very well.

What pushed you to join Roto, what are your skillsets and how does it translate to your role within the team?

I originally found Roto through a personal relationship with Chris Karasch. We were talking work at an outside gathering and found that we had the pump industry in common, my background being in repair and his being in sales and his somewhat new role as President of Roto at that time. I have a background in both business to business sales in the manufacturing industry, as well as a service and repair background in plastics and hydraulics. This combination of professionalism and hands-on experience serves me well in the customer facing and non-customer facing aspects of my job.

Tell us something unique about yourself. Tell us your favorite part of being on the Roto Pumps team.

A fun fact about myself is that my wife and I welcomed our first child in November of 2024. He is already a very curious little man and I am sure he will be a tinkerer as he grows up, just like I was. My favorite part of being on the Roto Pumps team is that we all have a common goal – to grow the Roto Pumps brand and be a part of something larger than ourselves.

EXHIBITIONS

We showcased our specialized pumping solutions for the wastewater, mining and sugar processing industry, highlighting Roto's capability to deliver reliable pumping solutions in demanding applications.



19–20 Sept. 2025, Tirupati, India

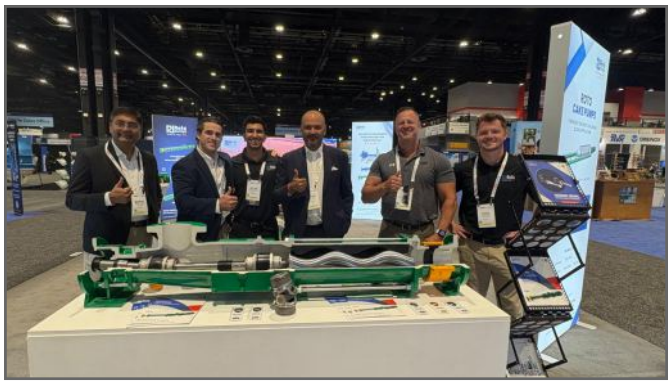

Date: 27 Sept. – 01 Oct. 2025, Chicago, USA



23–25 Sept. 2025, Wayville South Australia

NEW JOINING



I joined Roto Pumps as General Manager in the UK to lead growth through operational excellence and customer-focused strategies.
My future plans include expanding our UK market share and capabilities, directly contributing to Roto Pumps Limited's ambition of achieving $100M in global revenue by 2028.

Mr. Richard Stirch
General Manager
Roto Pumps, UK



Its been a while since i wonder to work in Roto Pumps and now comes true. With my pass experience as end user and pump sales engineer, I strugle to enlarge Roto Pumps market share and sales to be well-known as in my territory especially Indonesia.

Mr. Singgih Adhiyatma
Sales Manager, East Java
Roto Pumps, Malaysia

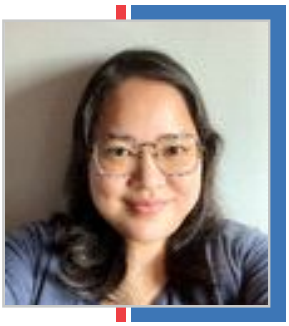

It is an honor to join Roto Pumps as Residential Sales Manager. Having worked for more than a decade in the pump industry, primarily in business development, I am eager to apply my knowledge and excited to collaborate with the team and achieving success together." Thank you.

Ms. Jaeng Sanitkam
Resident Sales Manager
Roto Pumps, Malaysia

BEST INSTALLATION IMAGES

At Roto Pumps, Every month we host the Best Pump Installation Image Competition and award first prizes to domestic and international winners for their outstanding participation!

DOMESTIC

JULY

Winner - Vijay Chandra
Application: **Liquid glucose**



SPETEMBER

Winner - Himanshu Jalwal
Application: **Caustic Lye / Viscose Transfer**



INTERNATIONAL



JULY

Winner - Sean clark
Application: **Effluent**



SEPTEMBER

Winner - Mr. Yong
Application: **Screw Press**



Rotor Whirling Machine

Roto pumps since 1968

ROTO PUMPS LTD.

Regd. Off. & Global Headquarters

14, Roto House, Noida Special Economic Zone
Noida-201305, UP, India
Tel: +91 120 2567902-5, Fax: +91 120 2567911
Email: contact@rotopumps.com
CIN: L28991UP1975PLC004152

Overseas Establishments

Roto Pumps Ltd.
Email: sales@rotopumps.co.uk
Web: www.rotopumps.co.uk

Roto Pumps Ltd., Australia
Email: sales@rotopumps.com.au
Web: www.rotopumps.com.au

Roto Pumps North America Inc.
Email: sales@rotopumps.us
Web: www.rotopumpsna.com

Roto Pumps MENA FZE
Email: sales.mena@rotopumps.com
Web: www.rotopumps.com

Roto Pumps Africa (Pty.) Ltd.
Email: sales@rotopumps.co.za
Web: www.rotopumps.co.za

Roto Pumps GmbH
Email: sales.rpg@rotopumps.com
Web: www.rotopump.de

Roto Pumps (Malaysia) Sdn. Bhd.
Email: salesmy@rotopumps.com
Web: www.rotopumps.com.my

www.rotopumps.com