Roto pumps since 1968

WE COMPETE WITH ONLY ONE PUMP

# ROTO TECH

ISSUE NO : 4 | QUARTERLY TECHNICAL BULLETIN | APRIL - JUNE, 2025

## WHAT'S INSIDE


- Leadership Talks
- Mechanical Seals: A Comprehensive Guide
- Roto Spotlight: New Product Launch
- New Applications
- Major Orders Received
- New Distributors
- Customer Engagement Spotlight
- Exhibitions, New Joining & Best Installations
- Manufacturing Infrastructure


**Junior:** "Why do we use double mechanical seals?"
**Senior:** "Like earplugs for pumps—keeps the gossip in and the leaks out."
**Junior:** "Do they work?"
**Senior:** "Better than HR's confidentiality policy."



## EDITORIAL

I'm pleased to reconnect with you through this latest edition of our quarterly newsletter—a moment to reflect on the milestones we've achieved and the progress we're driving forward.

At Roto Pumps, innovation is at the core of everything we do. We proudly unfolded the $100 journey with the launch of our P Series Progressive Cavity Pumps—a compact, advanced range with the smallest footprint in its class, tailored to meet modern industry demands for space and efficiency.

Our subsidiary Roto Rudra also introduced the Neo Series, designed for small-scale applications that require precision without compromising on performance—reaffirming our commitment to responsive and reliable solutions.

We're excited to share that the P Series secured two significant orders from North America within days of its launch. We've also received major orders from leading oil & gas companies, further strengthening our sector presence. Additionally, we've welcomed four new distributors, expanding our global service reach.

Beyond business, we're focused on customer engagement. Our ROTO IPL Contest brought the community together, celebrating the cricketing spirit with exciting prizes, including a brand-new iPad.

As always, thank you for your trust and support. Together, we continue to build on shared values and a relentless pursuit of excellence.

Sincerely yours,
**Arvind Veer Gupta**
**Dy. Managing Director**
**Roto Pumps Ltd.**

Editorial Team - Mr. Vinay Kumar Dhar | Mr. Manish Dabas | Ms. Asmita Mishra | Mr. Parshuram Bhati

# LEADERSHIP TALK IN LEADING MAGAZINE

Harish Chandra Gupta is steering the second generation of a family-built enterprise towards international dominance with Roto Pumps' P Range and a bold growth vision.



Mr. H. C. Gupta
(Chairman & Managing Director)

In 1968, when Ram Ratan Gupta, a coal mining entrepreneur from India, decided to create an indigenous version of a highly specialised industrial pump, few could have foreseen the ripple effects. At a time when India relied heavily on imports—especially for critical industrial machinery—he built a progressive cavity pump from scratch, not only as a product but as a symbol of India's industrial awakening.

More than five decades later, Roto Pumps Ltd., the company born from that revolutionary idea, is a multinational entity present in 55+ countries, with over 325,000 successful pump installations.

At the helm today is Harish Chandra Gupta, Ram Ratan Gupta's son and Chairman & Managing Director, who is not only carrying forward the legacy but aiming for a bold new target—$100 million in revenue by 2028.

"This is not just about scaling. We're redefining what Indian engineering can achieve globally. My father always said, 'If I can do it, you can do it,' and that spirit still drives us," says Gupta.

In the last six years, the company has grown by 2.3 times. Currently, they are targeting growing three times in the next four years. "2/3rds of our sales come from exports, particularly from developed countries," Gupta asserts.

In the last capex cycle, 75 crores have already been invested in capital expenditure, and another 50 crores is planned—much of it directed at a new solar pump manufacturing facility, signalling Roto's ambitions in renewable energy solutions.

**From import substitution to export supremacy**

One of the most remarkable aspects of Roto Pumps' journey is its transformation from an import-substitution company to a global exporter. Today, nearly two-thirds of its sales come from international markets, primarily developed countries with stringent performance standards.

"We compete directly with German, American, and British manufacturers—and win. In these demanding markets, Roto is now a known and trusted name," says Gupta.

With state-of-the-art manufacturing spread across 40,000 square meters and vertical integration capabilities like in-house elastomer compounding and tungsten carbide coating, Roto ensures complete quality control—a key differentiator in the world of positive displacement pumps.

**Follow the link or QR Code to Read the full article:**
https://shorturl.at/RsSER

# MECHANICAL SEALS: A COMPREHENSIVE GUIDE FOR INDUSTRIAL RELIABILITY

**The Heart Of Leak-Free Performance**

Mechanical seals are precision-engineered sealing components critical to the reliability and operational efficiency of rotating equipment such as pumps, compressors, and agitators. Unlike traditional gland packing methods, mechanical seals offer superior sealing capabilities by eliminating leakage, significantly enhancing equipment longevity and minimizing maintenance demands.

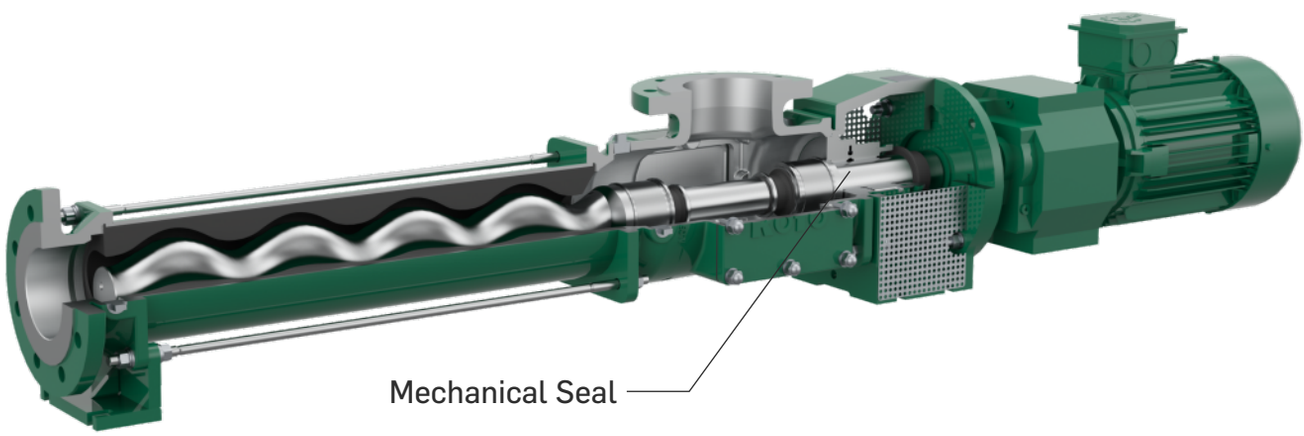


## How Mechanical Seals Work: Principle and Core Components

Mechanical seals operate fundamentally by maintaining constant contact between two meticulously polished surfaces:

**Rotating Seal Face (Primary Ring):** Mounted on the rotating shaft; dynamically balanced to reduce vibration.

**Stationary Seal Face (Mating Ring):** Fixed in the housing; provides a stable sealing surface.

The seal faces are held tightly together through spring pressure, hydraulic load, and other engineered forces, forming an efficient, dynamic seal that withstands diverse operating conditions.

## Mechanical Seal Design Classifications

**Balanced and Unbalanced Seal Design**

**Balanced Seal:**A balanced seal reduces the contact pressure between seal faces by limiting the hydraulic load acting on them. This enables the seal to operate at higher pressures, generate less heat, and extend seal life. A seal is considered balanced when the balance ratio is less than 100%, meaning less of the pumped fluid pressure acts directly on the seal face.



Example: Handling light hydrocarbon condensates in upstream oil

operations, where vapor pressure is high and fluid lubricity is low. Hot oil transfer in refinery, where balanced seals withstand high temperatures and pressures.



**Unbalanced Seal:** An unbalanced seal allows full hydraulic pressure to act on the seal face. This occurs when the balance ratio is 100% or more, resulting in higher face loading. These seals are simpler and typically used in low-pressure, clean-fluid applications where the risk of wear or thermal stress is minimal.

Example: Pumping treated water or polymer-injected water in enhanced oil recovery systems.

**Rotating vs. Stationary Seal Heads**

**Rotating Seal Head:** The seal face rotates along with the shaft. It is suitable for low-speed applications where shaft misalignment, deflection, and dynamic forces are minimal. The simpler construction and lower inertia make it cost-effective and reliable under steady operating conditions.

Example: Low-speed sludge transfer in wastewater treatment, where shaft deflection is minimal and flow is steady.




**Rule of Thumb:** When the shaft surface speed exceeds 25.4 m/s, a stationary seal is recommended. At higher speeds, a rotating seal face is more prone to distortion and instability, which can lead to premature failure. Stationary seal heads offer greater sealing reliability under such dynamic conditions.

**Stationary Seal Head:** The seal face is fixed, and the mating ring rotates. This configuration is ideal for high-speed shafts or conditions involving greater mechanical stress, vibration, or misalignment.

Example: Chemical dosing pumps operating at high speed, or twin-screw pumps used in marine fuel transfer where shaft speeds are high and consistent sealing is critical.

**Single Spring vs. Multiple Spring Designs**
The selection between single spring and multiple spring mechanical seals depends on factors such as space limitations, nature of the pumped fluid, and ease of maintenance.

**Single Spring Seals:** These seals are typically used in conjunction with bellows-type seals to load the seal faces. Their open design makes them less prone to clogging, making them ideal for slurry, viscous, or fibre-laden fluids. The larger spring coil also makes cleaning and inspection easier.

Example: Crude oil with wax/paraffin content, where solid particles may clog compact spring designs.

**Multiple Spring Seals:** It features several smaller springs evenly distributed around the shaft. These are more compact in axial length and provide uniform face loading. Their design is ideal for clean fluids and higher-speed applications.

Example: Food-grade syrup or concentrate beverage transfer, where hygiene and precision matter.

## Advantages of Mechanical Seals

Mechanical seals offer several key advantages that directly impact operational efficiency and cost-effectiveness:

- **Near - Zero Leakage Performance:** Significantly reduced fluid leakage, improving environmental safety and regulatory compliance.
- **Superior Reliability:** Exceptional capability to operate under challenging environments including extreme temperatures, corrosive fluids, and varying pressures.
- **Reduced Wear and Maintenance:** Limits mechanical wear on pump shafts, sleeves, and bearings, drastically reducing maintenance intervals and associated downtime.
- **Longer Equipment Lifespan:** Enhanced durability and controlled operating conditions prolong equipment and seal life.
- **Safely handle Hazardous Fluids:** Particularly beneficial in sealing aggressive, hazardous, toxic, or radioactive fluids, providing enhanced safety and environmental protection.

## Practical Limitations

Despite their substantial benefits, mechanical seals require specific considerations for optimal application:

- **Higher Initial Cost vs. gland packing.**
- **Requires Expert Installation and alignment.**
- **Sensitive to Improper Handling during assembly or commissioning.**

## Mechanical Seals Classifications

**Internal / External Mounted Seals**

Internal Mounted Seals: This is the most common sealing arrangement, wherein the liquid under pressure works in conjunction with the spring load to maintain consistent contact between the seal faces. This ensures effective sealing performance, simplicity, and operational efficiency.

Example: Internally mounted seals are used in municipal wastewater pumps for effectively managing varied highly viscous sludge, chemicals and dewatering application

**External Mounted Seals:** Primarily used in applications involving low pressure, external seals are advantageous in scenarios where corrosion or chemical reactions might occur if the seal's metal parts are

directly exposed to the sealed fluid. Such external mounting shields sensitive seal components from aggressive or corrosive liquids.

Example: It is used in acidic chemical transfer processes.

**Double Seals Configuration**

**Back to Back Double Seals -** It consist of two single seals arranged back-to-back, with their primary seal faces oriented in opposite directions within the stuffing box. A neutral barrier fluid—maintained at a pressure higher than the pumped fluid—is circulated between the seals. This fluid lubricates the seal faces and prevents the process fluid from escaping to the atmosphere or entering the seal chamber.

The inboard seal (process side) retains the pumped fluid, while the outboard seal (atmospheric side) contains the barrier fluid, ensuring no loss of the neutral liquid and providing an extra layer of protection.

Example: Commonly used in the Oil & Gas industry for handling hazardous liquids in open or closed drain applications, as well as in knock-out drum pump systems, where external mounting helps protect seal components from corrosive or contaminated fluids.

**Tandem Seals -** It consist of two single seals mounted face-to-face in the same direction. A neutral buffer fluid is circulated between the inner (inboard) and outer (outboard) seals. The inboard seal handles the pumped process fluid, while the outboard seal retains the buffer fluid and blocks any potential leakage to the atmosphere. In some systems, this buffer fluid is circulated to absorb heat and cool the seal chamber.

Example: Tandem seals are widely used in pumps handling ammonium nitrate emulsions or solvent-based explosive liquids. These fluids are highly flammable or reactive, and even minor leakage can pose severe safety risks. The tandem seal arrangement ensures that any potential leak is contained within a buffer zone, drastically reducing the risk of ignition or operator exposure.

## Material of Construction

Appropriate material selection significantly influences the performance, durability, and compatibility of mechanical seals:

- **Primary Ring:** Materials include carbon (for general applications), metal-filled carbon (for improved durability), tungsten carbide (excellent wear resistance), and silicon carbide (exceptional corrosion and abrasion resistance).
- **Mating Rings:** Typically made of ceramic or tungsten/silicon carbide, providing excellent durability, hardness, and resistance to wear.
- **Elastomeric Components ('O' Rings & Bellows):** Choices include nitrile, ethylene propylene (EPDM), and chloroprene, selected based on chemical compatibility, temperature range, and pressure conditions.
- **Metal Bellows & Hardware Components:** Typically fabricated from stainless steel or nickel-based alloys, offering superior strength and corrosion resistance.

## Seal Support Systems API Plans

API seal flush plans are implemented to control the environment around mechanical seals, ensuring proper lubrication, temperature regulation, and contamination prevention — all of which significantly enhance seal life, performance, and safety, especially in demanding pump applications.

**1. API Plan 02 – Dead-End Seal Chamber**

Description: No flushing or circulation; the seal chamber remains stagnant.

**Example:** Used in PCPs pumping clean water in non-critical applications with stable conditions.

**2. API Plan 11 – Discharge Recirculation to Seal Chamber**
Description: Fluid is taken from the pump discharge and routed back to the seal chamber to flush and cool the seal.
**Example:** Twin screw pumps transferring lube oil or diesel, where clean fluid is available and thermal control is needed.

**3. API Plan 13 – Seal Chamber to Suction Recirculation**
Description: Fluid flows from the seal chamber back to the suction side, reducing chamber pressure.
**Example:** PCPs handling high-viscosity fluids or slurries, to avoid pressure build-up in the seal area.

**4. API Plan 31 – Cyclone Separator with Clean Flush**
Description: A cyclone removes solids from discharge fluid before it enters the seal chamber.
**Example:** Sludge or biomass slurry pumps (PCPs), where abrasive particles can damage seal faces.

**5. API Plan 32 – External Clean Flush to Seal Chamber**
Description: Injects clean fluid from an external source to the seal chamber.
**Example:** Chemical transfer pumps or twin-screw pumps in paint plants, where process fluid is too aggressive or contaminated.

**6. API Plan 62 – Atmospheric Side Quench**
Description: Steam, air, or liquid is applied to the atmospheric side of the seal to prevent coking or icing.
**Example:** PCPs handling hot polymers or sticky fluids that may solidify on the outer face.

**7. API Plan 54 – Pressurized Barrier System for Double Seals**
Description: A closed-loop external system supplies clean, pressurized barrier fluid between double seals.
**Example:** Twin screw pumps in hazardous chemical or explosive liquid service, ensuring zero process leakage.

## Mechanical Seal Selection Process- A Step-by-Step Guide

Follow these key steps to ensure proper mechanical seal selection based on application demands, fluid properties, and system conditions:

1. **Define operating conditions:** temperature, pressure, shaft speed.
2. **Analyze fluid properties:** corrosiveness, abrasiveness, volatility.
3. **Choose seal type:** single, double, cartridge, or split.
4. **Select seal face material:** based on lubricity and wear.
5. **Match elastomers:** for chemical and temperature compatibility.
6. **Balance vs. unbalanced:** match pressure and media characteristics.
7. **Configuration choice:** internal/external, rotating/stationary.
8. **Pick API Plan:** based on contamination, temperature, and pressure.
9. **Verify installation & maintenance needs:** cartridge seals for ease of installation.

### Take Away

Mechanical seals have become an essential technology for achieving reliable, leak-free performance in modern pumping systems. Their ability to handle a wide range of fluids—including corrosive, abrasive, toxic, and high-temperature media—makes them indispensable across industries like oil & gas, wastewater, chemicals, and food processing. By understanding the principles of seal operation, design types, API flush plans, and the seal selection process, engineers can ensure optimal sealing performance, reduced downtime, and enhanced equipment lifespan. With proper installation, material compatibility, and system integration, mechanical seals offer a sustainable and cost-effective solution for long-term pump reliability.

# ROTO SPOTLIGHT

## The $100 Million Journey Unfold With the Launch of Our Next-Gen ‘P’ Range Progressive Cavity Pumps

We hosted a landmark event – "Roto Next – The $100 Million Journey Unfold" – at our Greater Noida and Noida facilities on 16th April 2025. Roto Pumps proudly marked a historic chapter in its legacy with the grand unveiling of the Compact P Range Pumps. This momentous launch wasn't just the introduction of a new product range—it was a bold declaration of our intent and a powerful leap toward our strategic goal of becoming a $100 million company by FY 2028. The day brought together a distinguished gathering of our customers, channel partners, distributors, and media representatives to witness a defining moment in Roto Pumps' legacy.

## The Launch At A Glance:






## ‘P’ Range Pump Launch

**P-Range Progressive Cavity Pumps featuring Unique Thrust Bush Joint** - a new generation of fluid-handling solutions from Roto Pumps, designed for superior efficiency, reliability, and versatility across diverse industries.



**Flow Rate** - Up to 360 $m^3$/hr / 1600 GPM
**Pressure -** Up to 24 Bar / 350 PSI

From wastewater management, sugar, paper, and paint, to biogas, power & metal, mining, meat processing, ceramics, and chemicals, the P-Range is built to meet the unique challenges of every sector.

These pumps are engineered with a modular design featuring multiple frame sizes and enhance sealing options allowing them to efficiently handle varied media. These pumps come are available in different industry specific pumps like: cake pumps, small wide throat pumps, food pumps, and Roto KWIK pumps, etc.

## Key Features:

**1. Optimized Rotor & Stator Geometry**
Stator's are designed with tapered entry to facilitate easier entry of media and improve the suction capability.

**2. Thrust Bush Joint**
The uniquely designed thrust bush joint efficiently absorbs axial loads, ensuring smooth and reliable operation. A metal-reinforced boot seal prevents media from entering the joints, extending joint life and reducing wear and maintenance.

**3. Improved Pump Housing with Top Hat Design**
Two large inspection ports enable easy & quick inspection of the joints and removal of any blockage during pumping. It enables easy conversion from a close-coupled pump design to a long-shaft arrangement with a bearing housing.

**4. Advanced Shaft Seal Design**
The open seal housing design prevents media accumulation, enhancing seal life and eliminating the need for seal flushing plans.

**5. Heavy Duty Bearing Housing**
Bearing Housing Designed with a two-piece shaft, it supports all types of drives and simplifies servicing of rotating parts.

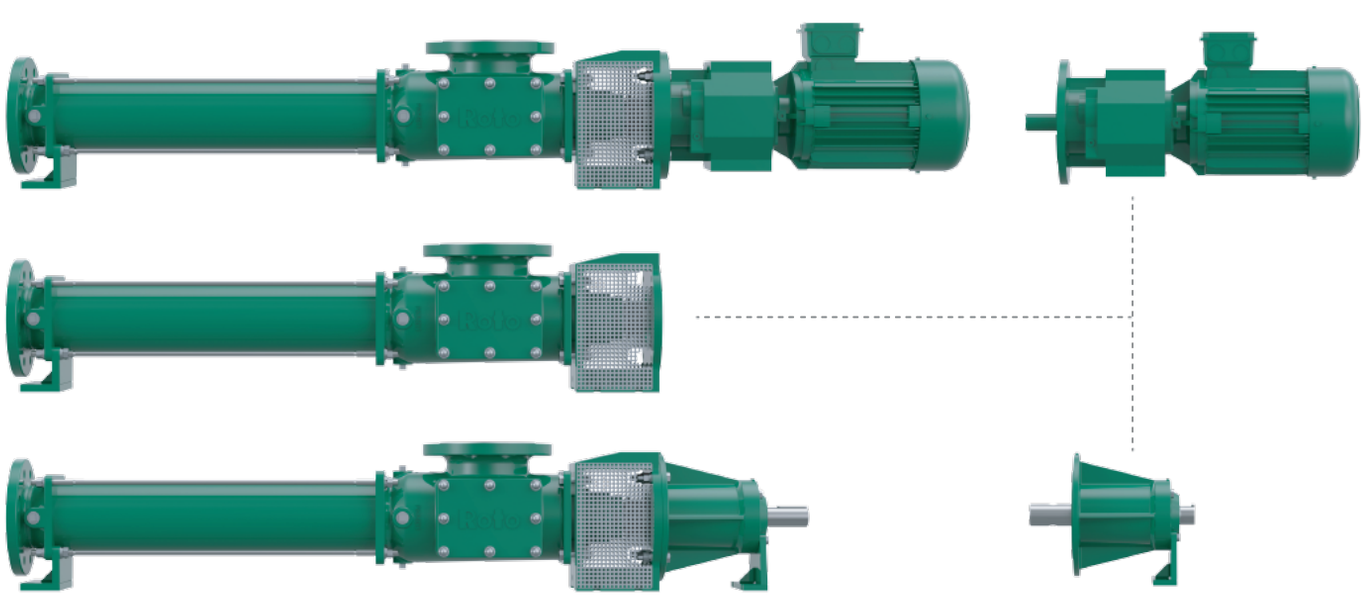

# Voices of Our Visionaries on 'P' Range Launch

Marking a key milestone in our growth story, the P Range launch brought forward powerful reflections from Roto Pumps' top leadership. Their words highlight our commitment to pushing boundaries and delivering value to our customers worldwide

With the launch of the Roto P Range, we are reaffirming Roto's position as a global force in fluid handling, said Harish Chandra Gupta, Chairman & Managing Director, Roto Pumps. He added, This innovation is expected to significantly drive our growth. We're not just manufacturing pumps we're delivering reliability and sustainability. Roto unveiled an ambitious plan to achieve $100 million revenue by 2028.



**Mr. Harish Chandra Gupta**
Chairman & Managing Director



Anurag Gupta, Joint Managing Director, Roto Pumps Ltd. elaborated, "Our commitment to R&D, infrastructure modernization, and automation is enabling us to scale up delivery and respond faster to global customer needs. The Roto P Range will be a driving force in global growth, especially in industries where downtime is not an option."

**Mr. Anurag Gupta**
Joint Managing Director

Arvind Gupta, Deputy Managing Director, Roto Pumps Ltd. expressed, "The Roto P Range was developed with a sharp focus on end-user requirements—ease of installation, low maintenance, and precision in performance. It reflects our legacy of engineering excellence and our vision of solving real-world fluid handling challenges with intelligent, application-specific solutions.



**Mr. Arvind Veer Gupta**
Deputy Managing Director

# Roto Rudra Launches Neo Series – Customer - Focused Solar Pumping Solutions for Small-Scale Needs

**Roto Rudra** a subsidiary of Roto Pumps, is dedicated to delivering sustainable, solar-based pumping solutions. Continuing its commitment to innovation and customer-focused design, Roto Rudra has recently launched the Neo Series—a new line of solar submersible helical pumps tailored for applications requiring lower flow rates.

Engineered based on extensive customer insights, the **Neo Series** combines compact design, cost-effectiveness, and technological reliability. These pumps feature Roto Rudra's exclusive 10-pole motor design, providing smoother performance at lower speeds, along with dry run protection and a hybrid AC/DC switching option for maximum flexibility in off-grid and semi-grid conditions.



**Technical Highlights:**

- Maximum Head: 80 m
- Maximum Flow: 1.5 $m^3$/hr
- Drinking water supply

**Ideal Applications:**

- Small-scale farming
- Livestock watering
- Home gardening and horticulture

With the Neo Series, Roto Rudra continues to empower rural and remote communities with sustainable water access solutions—fueling growth through innovation.

## Founder's Day Celebration – Remembering the Heart of Roto - Mr. Ram Ratan Gupta Sir

On 4th February, we celebrated Founders' Day—the birth anniversary of Shri Ram Ratan Gupta, our visionary founder and the heart of Roto legacy. The event paid tribute to his enduring legacy and was followed by the Roto Innovation & Excellence Awards, a celebratory lunch, and a musical evening that brought the Roto family together in joy and pride.







# NEW APPLICATION DEVELOPMENTS

## LABSA (BENZENE SULPHONIC ACID) APPLICATION

Roto Pumps India is proud to share latest success in providing a specialized pumping solution for a leading manufacturer of silicone-based sealants widely used across textile, personal care, automotive, construction, and electronics industries. Their operations involve the transfer of critical raw materials like IT, ALT LABSA, TEA, and LABSA (benzene sulfonic acid)—essential compounds used in the production of high-performance coatings and adhesives which causes frequent breakdown of stators and rotors. Understanding the corrosive nature and viscosity of these chemicals, Roto Pumps engineered a solution that ensures:

- Smooth and efficient handling of aggressive raw materials
- Minimal wear and maximum durability under continuous duty
- Optimized flow rate and pressure for precise chemical transfer

By delivering this solution Roto Pumps once again reinforces its commitment to innovation, reliability, and performance in chemical processing applications.

**Application Details**

**Pump Series:** RM Series **Qty.:** 03 **Flow Rate:** 5 $m^3$/h (22 GPM)

**Media:** LABSA (BENZENE SULPHONIC ACID) **Pressure:** 10 bar (145 PSI)

# MAJOR ORDERS

## Roto Pumps North America Booked First Two Orders for Newly Launched P Series Roto Pumps

This is more than just an order – it's about the trust our customers place in us and the confidence they already see in the P Series. RPNA has proudly become the first subsidiary to bring the new range into action, booking not one, but two orders right after the launch.

**Order 1:**
The customer sought to replace their existing pump due to recurring breakdowns caused by material incompatibility with the Sodium Hydroxide fluid. The aggressive nature of the medium was leading to rapid wear and corrosion of internal components, resulting in frequent maintenance, unplanned downtime, and increased operational costs. Recognizing the need for a more robust and chemically compatible solution, the customer opted for Roto's P Series pump, designed to offer enhanced resistance and reliable performance in demanding fluid conditions.

**Application Details**

**Pump Series:** RP Series **Media:** Sodium Hydroxide (Flowable)

**Flow Rate:** 0.25 $m^3$/h (1.1 GPM) **Pressure:** 4 bar (58 PSI)

**Order 2:**
The second pump was booked for a paper mill client looking to replace their existing pump, which was proving inefficient in handling starch-based fluids. The previous unit frequently failed due to clogging and wear, leading to repeated downtime and high maintenance costs. Roto's P Series pump was selected as a reliable drop-in replacement, designed to handle viscous and abrasive media like starch with improved durability and operational efficiency.

**Application Details**

**Pump Series:** RP Series **Media:** Starch

**Flow Rate:** 3.5 $m^3$/h (15 GPM) **Pressure:** 10 bar (145 PSI)

## Major order of 5 Pumps from a Renowned Oil & Gas Company

**Roto Pumps MENA** has secured a prestigious order for five VM Series vertical bare shaft progressive cavity pumps from well-known Oilfield Equipment Trading organisation in Abu Dhabi. These pumps are designed to handle Chloride & H2S content at pressures up to 55 bar, these pumps reinforce our expertise in delivering reliable, high-pressure solutions for the oil and gas sector. This order stands as a testament to the growing trust in Roto's high-performance solutions and local support capabilities in the Middle East's critical energy sector.

**Application Details**

**Pump Series:** VM Series **Media:** Chloride & $H_2S$ content **Qty.:** 05

**Flow Rate:** 2 $m^3/h$ (8.8 GPM) **Pressure:** 55 bar (798 PSI)

## Bagged Major Order: Serving India's Agro-Processing Sector

**Roto Pumps India** has secured a significant order for seven pumps across varied pump series, catering to the critical needs of the agro-processing industry. These pumps have been deployed for transferring viscous and nutrient-rich media such as starch, liquid glucose, and corn-steep liquor syrup—common inputs in food, feed, and fermentation applications. With their ability to handle shear-sensitive fluids gently and efficiently, Roto pumps help preserve product integrity while optimizing processing performance.

**Application Details**

**Pump Series:** RM, RL, WL Series **Media:** Starch, Concentrated Syrup (liquid glucose), Corn Steep Liquor Syrup

**Flow Rate:** 10-30 $m^3/h$ (44 -132 GPM) **Pressure:** 7 bar (102 PSI) **Qty.:** 07

## Prestigious Order Received from India's Biggest Oil Refinery

Roto Pumps tackles the toughest fluids like a pro. Fluids like oil sludge, bitumen, crude oil, asphalt, and furnace oil is no easy task. These mediums are extremely viscous, temperature-sensitive, and often carry abrasive contaminants that challenge even the most rugged pumping systems. Our customer was facing following challenge due to nature of these fluids:

- Inconsistent flow at elevated temperatures to leads to solidification and pipe blockages.
- Crude oil can contain waxes, water, and solids, leading to wear and pump inefficiency.
- Furnace oil tends to thicken at low temperatures, demanding reliable suction and minimal pulsation.

Roto delivers 4 RM Series Progressive Cavity Pumps that are engineered to meet these challenges. With high-torque capability, abrasion-resistant internals, and a low shear pumping mechanism, RM pumps ensure smooth, clog-free transfer even under extreme conditions.

**Application Details**

**Pump Series:** RM Series **Media:** Oily Sludge, Oil, Water **Qty.:** 04

**Flow Rate:** 5-50 $m^3/h$ (22 - 220 GPM) **Pressure:** Upto 5 bar (72.5 PSI)

## Secured Major Order for Reputed Bio-Refinery

Roto Pumps receives a significant order from well-known oil refinery, which has recently expanded its operations dedicated to ethanol production. The plant uses non-edible food grains — unsuitable for human consumption — as the primary raw material.

Ethanol production begins by converting non-edible grains into a slurry or mash. The slurry is thick, abrasive, and contains suspended solids, which can cause clogging, uneven flow, and wear in traditional pumps.
Ethanol recovery involves distillation at elevated temperatures, dealing with volatile and heat-sensitive fluids. High temperatures can affect seal life, fluid integrity, and pump efficiency. We bridge the gap our client was facing by installing RM Series Progressive Cavity Pumps that are built to overcome these challenges.

**Application Details**

**Pump Series:** RM Series **Media:** Distillery Effluent **Qty:** 02

**Flow Rate:** 0-16 $m^3/h$ (0 - 70 GPM) **Pressure:** Upto 20 bar (290 PSI)

## Secures Major Order From Leading Paint & Coatings Manufacturer

A well-known paint manufacturing giant has placed trust in Roto Pumps to overcome VAE handling challenges in their paint manufacturing processes VAE is the core ingredient that helps hold pigment particles together and ensures the paint adheres well to surfaces once it dries. VAE emulsions are shear-sensitive—excessive mechanical agitation or turbulence can cause the emulsion to break down. Its adhesive, sticky nature that can cause build-up on internal pump components lead to blockages, reduced efficiency of our client's existing pumps. We provide tailored Progressive cavity pumps to handle Vinyl Acetate Ethylene Emulsion (VAE) — a shear-sensitive and highly viscous medium. These pumps gently handle the liquid, and provided long-lasting performance under demanding conditions.

**Application Details**

**Pump Series:** RM & RL Series **Media:** Vinyl Acetate Ethylene Emulsion (VAE)

**Flow Rate:** Upto 50 $m^3/h$ (220 GPM) **Pressure:** Upto 13 bar (188 PSI) **Qty:** 21

## Bagged Major Order for High-Capacity Sewage Treatment Project

Roto pumps India had received a major order for 23 pumps installed at a 360 MLD (Million Litres per Day.) sewage treatment plant in Mumbai. Sewage treatment presents complex challenges for pumping systems. The medium typically contains a dense mix of sludge, abrasive grit, fibrous solids, and organic waste, all of which are highly demanding on equipment. Conventional pumps often struggle with:

- Frequent clogging and downtime
- Excessive wear and tear from abrasives
- Reduced efficiency due to inconsistent flow
- High maintenance and operational costs

To overcome these hurdles, Roto deployed its RLCC progressive cavity pumps, specifically designed for high-viscosity, abrasive, and solid-laden media. These pumps provide Superior handling of thick and abrasive sludge without clogging. With this deployment, Roto Pumps continues to support India's wastewater infrastructure with tailored, reliable, and future-ready pumping solutions.

**Application Details**

**Pump Series:** RL Series **Media:** Sludge

**Flow Rate:** Upto 49 $m^3/h$ (215 GPM) **Pressure:** Upto 5.5 bar (80 PSI) **Qty:** 23

## Prestigious Order Received from a Prominent Player in Oil & Gas Sector

One of India's most trusted EPC companies in the energy sector, has placed a major order for Roto's RE Series Progressive Cavity Pumps to support their operations in the oil and natural gas domain.
Operating in the highly demanding environments of Upstream, Midstream, and Downstream segments, our client was encountering serious challenges in fluid handling—specifically:

- Corrosive chemicals and hydrocarbons
- Abrasive, high-viscosity oil fluids
- The need for reliable, low-maintenance operation in remote and hazardous locations

In such critical applications, even minor pump inefficiencies leading to significant downtime, safety hazards, and cost escalation. To address these challenges, we recommended the Roto RE Series pump, engineered for:

- High-viscosity and shear-sensitive fluid handling
- Efficient pumping of solids-laden, chemically aggressive media
- Clog-free, low-pulsation performance
- Rugged design suitable for high-temperature and hazardous zones

**Application Details**

**Pump Series:** RE Series | **Flow Rate:** 65 $m^3/h$ (286 GPM) | **Qty.:** 01

**Media:** Oil | **Pressure:** 39 bar (565 PSI)

# NEW DISTRIBUTORS

## Roto Pumps Partnered With 4 New Major Distributors

**Synergy Engineering Solutions - Qatar**

Roto Pumps MENA is proud to collaborate with Synergy Engineering Solutions LLC, a trusted and reputed provider of high-quality engineering solutions for the Oil & Gas and allied sectors in Qatar. This strategic partnership marks a key milestone in Roto Pumps' mission to strengthen its presence in the Middle East by delivering cutting-edge pumping solutions backed by local expertise. With a proven track record and deep industry knowledge, Synergy Engineering Solutions LLC brings strong market insight and customer-centric service capabilities. Their commitment to excellence and engineering integrity makes them an ideal partner to represent Roto Pumps' robust and innovative product range in one of the region's most critical energy markets. Together, we aim to offer reliable, efficient, and customized pumping solutions tailored to the demanding requirements of the Oil & Gas industry and beyond.

**Goforth Williamson- Florida**

Roto Pumps North America has taken a significant step in expanding its footprint in North America by partnering with Goforth Williamson, Inc. as its new distributor. This strategic collaboration is set to enhance Roto Pumps' reach nearby Florida region, ensuring customers benefit from high-quality pumping solutions and expert support. Goforth Williamson is a 30-year-old organisation, known for its extensive experience in pump distribution and service, specializes in providing top-tier fluid handling solutions across waste water and other municipal markets. With a strong focus on customer satisfaction and technical expertise, the company is well-equipped to represent Roto Pumps' innovative product range.

**Southeast Pump- Georgia**

Roto Pumps North America partnered with Southeast Pump, further strengthening its presence in the American market. With a strong reputation in the industry, Southeast Pump specializes in providing innovative pumping repair solutions tailored to meet the needs of industrial, municipal, and commercial applications. Their deep technical expertise and commitment to customer satisfaction make them an ideal partner for Roto Pumps. Through this partnership, businesses in the US market will benefit from reliable, efficient, and durable pumping systems, backed by a dedicated team of specialists offering seamless sales, service, and support.

**Liquid Handling Equipment- North Carolina**

Roto Pumps North America has partnered with Liquid Handling Equipment, North Carolina, a leading distributor and a trusted name in the US for over 30 years. Specializing in pumps, tanks, mixers, and filtration solutions. Liquid Handling Equipment brings extensive expertise and a strong commitment to excellence. This partnership enhances Roto Pumps' distribution network, ensuring efficient and reliable fluid handling solutions for a wide range of industries in US.

# CUSTOMER ENGAGEMENT SPOTLIGHT- BEYOND BUSINESS, INTO BONDS

## ROTO IPL 2025 Contest – Where Feedback Met Fun!

At Roto Pumps, we see customer engagement as more than just communication—it's about building lasting relationships rooted in trust and mutual growth. This bond not only drives innovation but also ensures that our solutions evolve with those who matter most—Our Customers.



During the IPL 2025, we launched the ROTO IPL Contest Campaign—a fun and interactive way to engage with customers. Customers shared their feedback for roto pumps products and services and predicted the IPL winner, giving us valuable insights into our strengths and improvement areas.

The enthusiastic participation and honest responses reaffirmed our commitment to customer-centricity. A big congratulations to **Mr. Basavaraj Baragi from Godavari Biorefineries Ltd,** who won a brand-new iPad for his accurate prediction and thoughtful feedback!

Initiatives like this not only strengthen our connection with customers but also reinforce our commitment to being a brand that listens, learns, and leads.

# EXHIBITIONS

## Palm Oil Technology And Innovation Exhibition 2025, Indonesia

We showcased our specialized pumping solutions for the palm oil processing industry, highlighting Roto's capability to deliver reliable, low-shear pumping in demanding applications. . The spotlight was our progressive cavity pumps engineered to efficiently transfer crude palm oil from oil tank to vertical clarifier, Pumping Skimmed Oil from Sludge Pit, pumping POME from MRE sump to anaerobic lagoon etc.




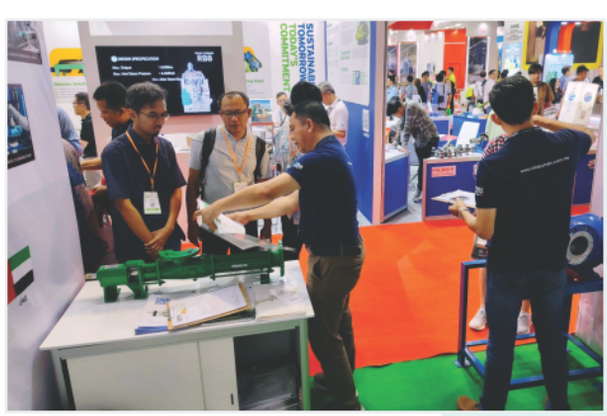

# EXPLORING NEW FRONTIERS

## A Talk with Mr. Jacob Bilvado, Sales Engineer Hosted By Mr. Chris Davis, Sales Director – Roto Pumps North America.

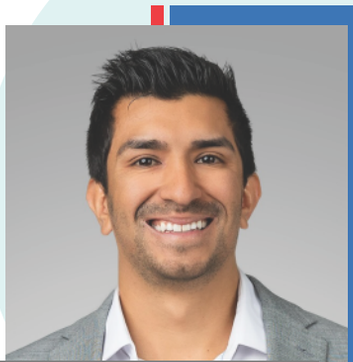

Mr. Jacob Bilvado,
(Sales Engineer)

**What do you feel you bring to the Roto Pumps team?**
I bring a strong foundation in technical project management and business development, backed by my leadership experience in the U.S. Air Force and customer-centric roles in software sales. I'm excited to contribute with energy, adaptability, and a team-first mindset—aiming to support Roto's expansion across the Western U.S.

**What attracted you to joining Roto Pumps?**
I was drawn to Roto by the opportunity to be part of a company with global reach and a strong product reputation—particularly in progressive cavity pump innovation. The ability to travel, grow with a young team, and build a new brand in North America aligns with my ideal career. However, beyond that, I saw an opportunity to grow both personally and professionally within a tight-knit, high-performing team. Continuing to establish Roto's presence in California and the western states, while getting hands-on with industries like oil and gas, food and beverage, agriculture, and wastewater, made it a perfect fit.

**What are some of the things you look forward to in your first year with Roto?**
I'm excited to hit the ground running—traveling, meeting customers, and learning the ins and outs of not only our pump technologies but the wide range of industries they support. I'm especially looking forward to growing our presence across my home state of California and the broader Western U.S., where I can leverage my local roots and personal network. Long term, I want to become a go-to technical sales resource, build lasting partnerships, and eventually take on a leadership role in later years as we grow the team.

**Fun fact about Jake that you want to share with the global Roto Pumps team:**
I'm from Central California and love spending time with my family, golfing, and exploring new places. Before joining Roto, I was a professional distance runner and an Air Force officer, and I bring that same energy and work ethic into sales. I'm young, driven, and enjoy connecting with others—whether that's through business, networking, or just sharing a laugh and/or beer. I'm here to work hard, grow fast, and help take Roto to the next level.

# NEW JOINING

I am grateful to Roto Pumps Limited for the opportunity to be part of such an esteemed organization. My goal is to contribute meaningfully to the company's growth by leveraging my skills, experience, and dedication within a dynamic work environment. I am committed to continuous learning, embracing greater responsibilities, and aligning my long-term career aspirations with the organization's vision—ultimately becoming a valuable and trusted asset to Roto Pumps Limited.



**Mr. Jitendra Verma**
Territory Sales Manager
Roto Pumps, India

I joined Roto Pumps Ltd. as a Senior Commercial Executive to grow within a globally recognized company known for innovation, quality, and international expansion. The role allows me to apply my commercial and operational experience to enhance supply chain efficiency, optimize costs, and improve customer satisfaction—all within a collaborative and growth-focused environment.



**Mr. Rakeshkumar Parmar**
Sr. Commercial Executive
Roto Pumps, India



Happy and it's my privilege to be a part of this Roto Family, my first interaction with the team it's clear that this is a place where collaboration, Innovation and professional growth are valued. I'm excited to contribute best of my effort to bring remarkable results and Hopefully can develop and succeeded together."

**Mr. Pankaj Sharma**
Service Engineer
Roto Pumps, India (Noida Team)

# BEST INSTALLATION IMAGES

At Roto Pumps, Every month we host the Best Pump Installation Image Competition and award first prizes to domestic and international winners for their outstanding participation!

## DOMESTIC

### MARCH

**Winner - Mr. Ragul**
Application: **Molasses**



### APRIL

**Winner - Mr. Vijay**
Application: **Veg oil**





**MAY**

**Winner - Mr. Ganti Somasundar**
Application: **Liquid Glucose**

## INTERNATIONAL



**APRIL**

**Winner - Mr. : Karthigesu**
Application: **- Clay slurry, Gypsum Slurry**



**MAY**

**Winner - Mr. Greame Martin**
Application: **Reactive Sludge**



Tungsten Carbide Coating Facility

since 1968

# ROTO PUMPS LTD.

## Regd. Off. & Global Headquarters

13, Roto House, Noida Special Economic Zone
Noida-201305, UP, India
Tel: +91 120 2567902-5, Fax: +91 120 2567911
Email: contact@rotopumps.com
CIN: L28991UP1975PLC004152

## Overseas Establishments

**Roto Pumps Ltd.**
Email: sales@rotopumps.co.uk
Web: www.rotopumps.co.uk

**Roto Pumps Ltd., Australia**
Email: sales@rotopumps.com.au
Web: www.rotopumps.com.au

**Roto Pumps North America INC.**
Email: sales@rotopumps.us
Web: www.rotopumpsna.com

**Roto Pumps MENA FZE**
Email: sales.mena@rotopumps.com
Web: www.rotopumps.com

**Roto Pumps Africa (Pty.) Ltd.**
Email: sales@rotopumps.co.za
Web: www.rotopumps.co.za

**Roto Pumps GmbH**
Email: sales.rpg@rotopumps.com
Web: www.rotopump.de

**Roto Pumps (Malaysia) Sdn. Bhd.**
Email: salesmy@rotopumps.com
Web: www.rotopumps.com.my

www.rotopumps.com